SPECIFICATIONS

Switch Function	SPDT
Electrical Ratings	200mA @ 30VDC
Electrical Life	10,000 cycles typical
Contact Resistance	< 50 mΩ initial
Actuation Force	200 +/- 100gF
Actuator Travel	2.5 mm total
Dielectric Strength	1000Vrms min
Insulation Resistance	> 100MΩ min
Operating Temperature Storage Temperature	-40°C to 85°C -40°C to 85°C

MATERIALS ←RoHS COMPLIANT

Actuator	Acetal
Housing	Steel
Base	Phenolic
Contacts	Phosphor Bronze, Silver Plated
Terminals	Brass, Silver Plated

ORDERING INFORMATION

1. Series:	**MS1206**	**L3**
MS1206		
2. Actuator Length:		
L3 = 3mm		
L6 = 6mm		

DIMENSIONS

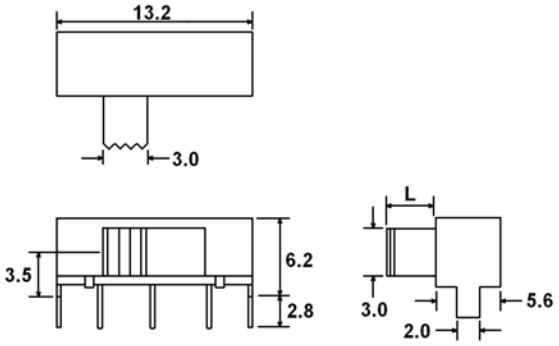

SCHEMATIC & PC LAYOUT

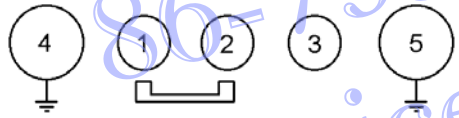

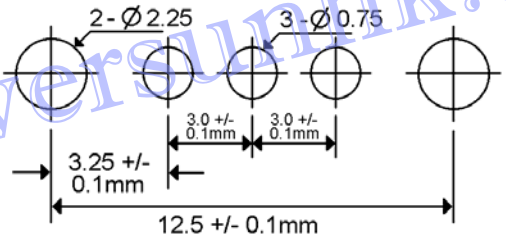

RIVERSUN
86-755-26055892/93/51
service@riversunhk.com