CAD FILE:

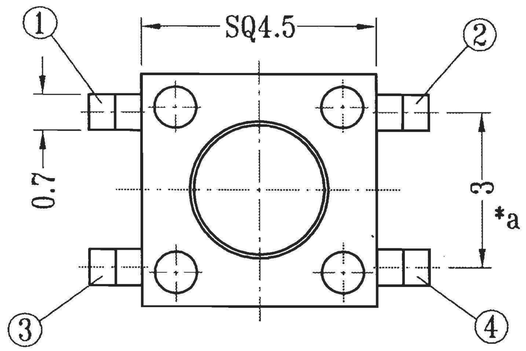

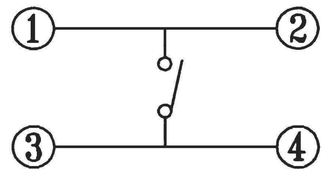

SCHEMATIC

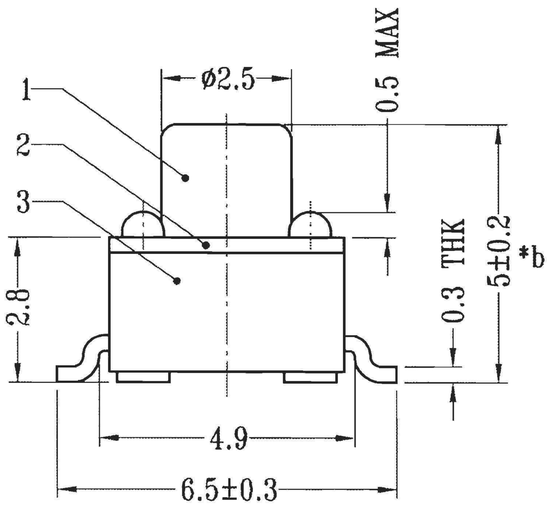

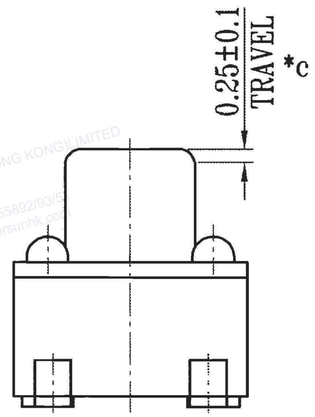

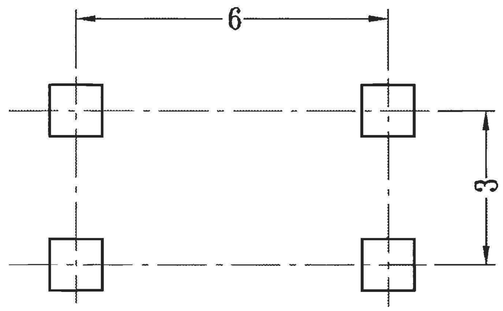

P.C.B LAYOUT

注: "*"表示关键尺寸(3个).

NO.	PARTS	MATERIALS	Q'TY	FINISH
8				
7				
6				
5				
4	CONTACT	SUS	1	Ag CLAD
3	CASE	NYLON+F.G,NYLON46/BRASS STRIP	1	BLACK/Ag PLATED OVER Ni PLATED
2	COVER	ZINC PLATE	1	Ni PLATED
1	KNOB	NYLON+F.G	1	BLACK

TOLERANCE UNLESS SPECIFIED				
WITHIN 1.5mm : ±0.1mm	A	31-Oct-2006	初 版	
OVER 1.5mm : ±0.2mm	ISSUE	DATE	DESCRIPTIONS OF REVISION	APPD.
TITLE : TACT SWITCH			UNIT : mm	DRWG NO.: TT-DR-TD10XB-00
MODEL: TD-10XB			SCALE: 6:1	DWN. / CHK'D / APPD.

RIVERSUN(HONG KONG)LIMITED
+86-755-26055892/93/94
service@riversunhk.com